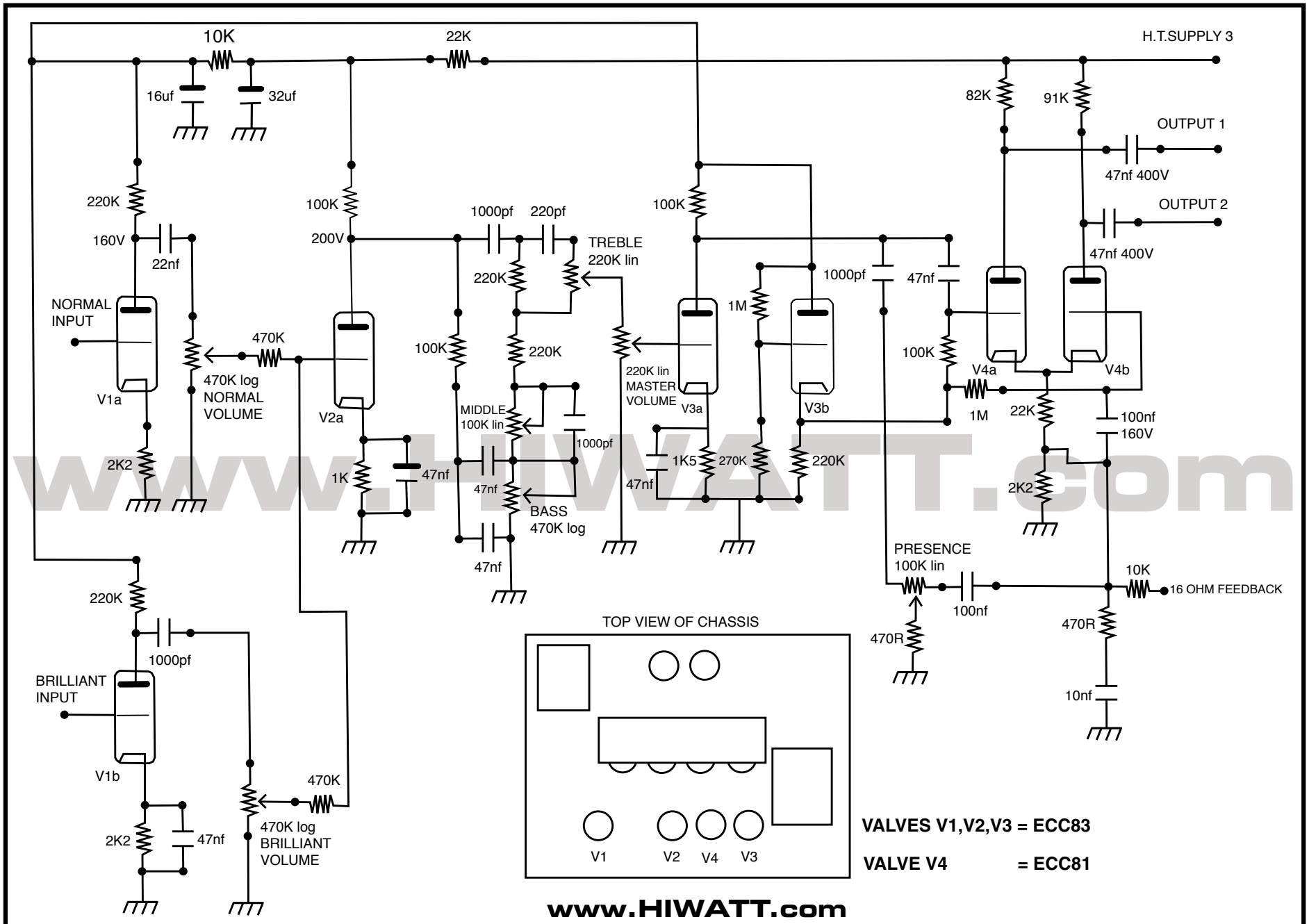

www.HIWATT.com

HIWATT® DR504 PREAMPLIFIER CIRCUIT DIAGRAM Copyright © HIWATT Amplification 2001